Baumer

Vision Technologies

SXC10

Facts and Data

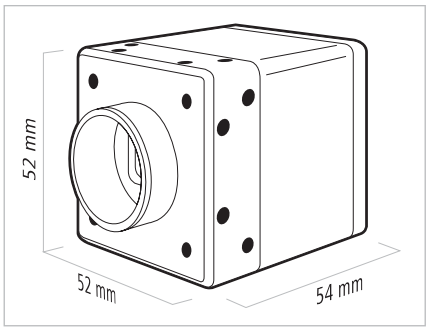

Digital Monochrome Matrix Camera, 1 Megapixel, CameraLink®

Sensor Information

Model Name	KODAK® KAI-01050
Type	1/2" interline progressive scan CCD
Native Resolution	1024 × 1024 pixels
Exposure Time	4 µsec ... 1 sec

Acquisition Formats

Image Formats	Full Frame	1024 × 1024 pixels	max. 120.0 fps
	Binning 2x2	512 × 512 pixels	max. 205.0 fps
	Binning 1x2	1024 × 512 pixels	max. 205.0 fps
	Binning 2x1	512 × 1024 pixels	max. 120.0 fps
Pixel Formats	Mono8, Mono10, Mono12		
Partial Scan	True Partial Scan, Region of Interest (ROI) arbitrary		

Image Pre-processing

Analog Controls	Gain (0 ... 26 dB), Offset (0 ... 1023 LSB | 14 bit)
Color Modes	Mono

Camera Features

Internal Buffer	256 MBytes (max. 240 images)
Synchronization	Free running, Trigger
Trigger Sources	Hardware, Software, FrameGrabber
Trigger Delay	0 ... 2 sec, Tracking and buffering of up to 512 trigger signals
Digital I/Os	3 input lines (with Debouncer), 3 output lines

Interfaces and Connectors

Data Interface	CameraLink® Base, Transfer rate 255 MBytes/sec Connector: Standard MDR26
Process Interface	M8 / 8 pins
Power Interface	M8 / 3 pins

Mechanical Data

Housing	Aluminum, IP40
Lens Mount	C-Mount
Dimensions	52 × 52 × 54 mm
Weight	230 g

Electrical Data

Power Supply	8 ... 30 V DC
Power Consumption	approx. 7.5 Watts

Environmental Data

Operating Temperature	+5 °C ... +50 °C (+41 °F ... +121 °F)
Humidity	10% ... 90% non condensing

CAMERA Link®

Kodak Image Sensors

CE FC RoHS COMPLIANT 2002/95/EC c UL us LISTED

Lambda photometrics
E: info@lambdaphoto.co.uk
T: +44 (0)1582 764334

Available Q1/2100

Technical data has been fully checked, but accuracy of printed matter not guaranteed.
Subject to change without notice. Printed in Germany 01/10